May show more part s than really exist.

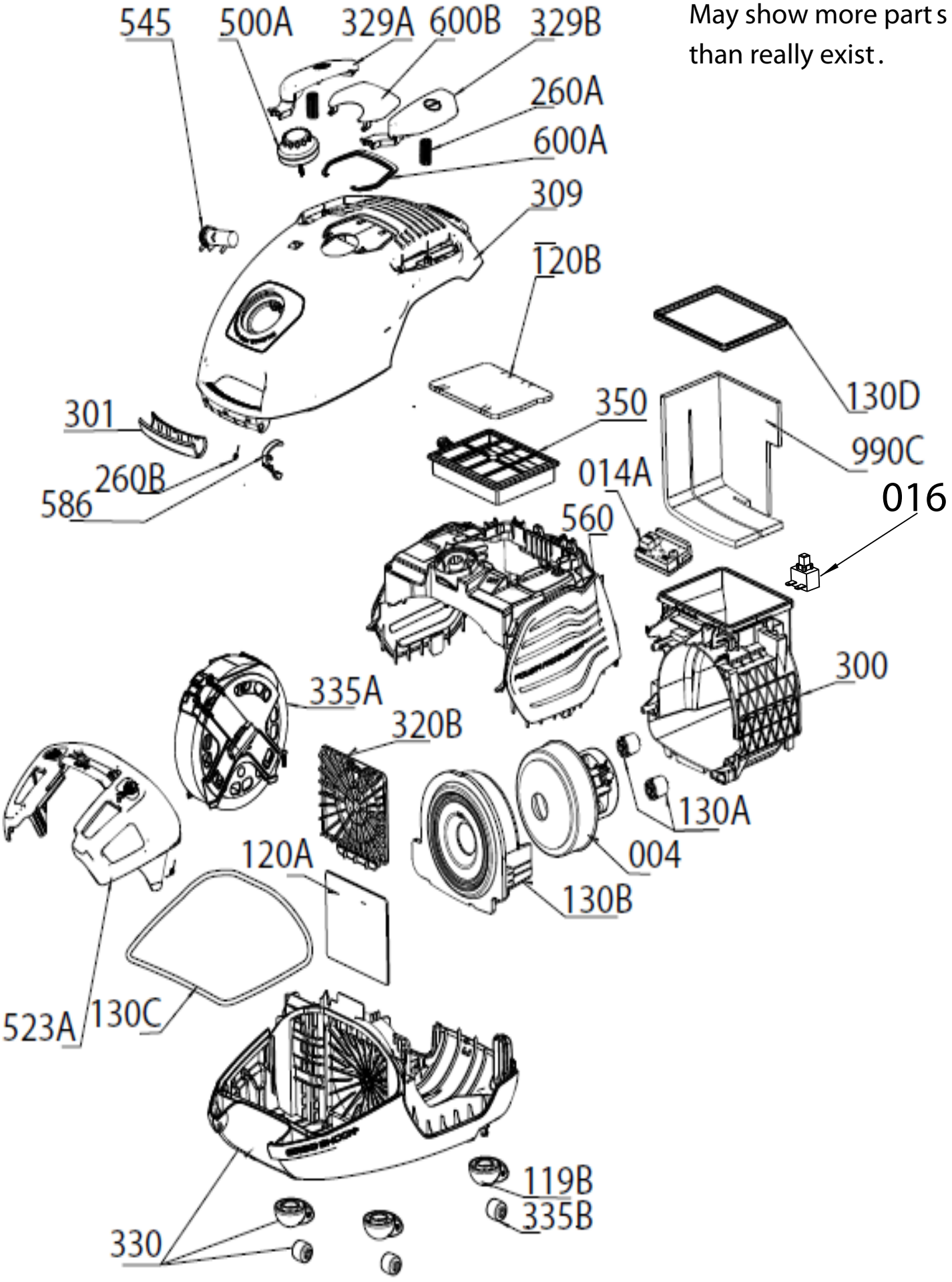

May show more parts than really exist